FPGA Design Concepts

Kareem Waseem

Senior HW Modeling Engineer

DVT FPGA Modeling team

SIEMENS

FPGA: Field Programmable Gate Array

- Large matrix of configurable logic blocks (CLBs) connected in a sea of interconnects
- Logic blocks are composed of Look Up Tables (LUTs), MUX and Flipflop
- LUT contains memory cells and each cell holds '0' or '1' depending on the outputs of the truth table, input patterns select one of the memory cells as an output

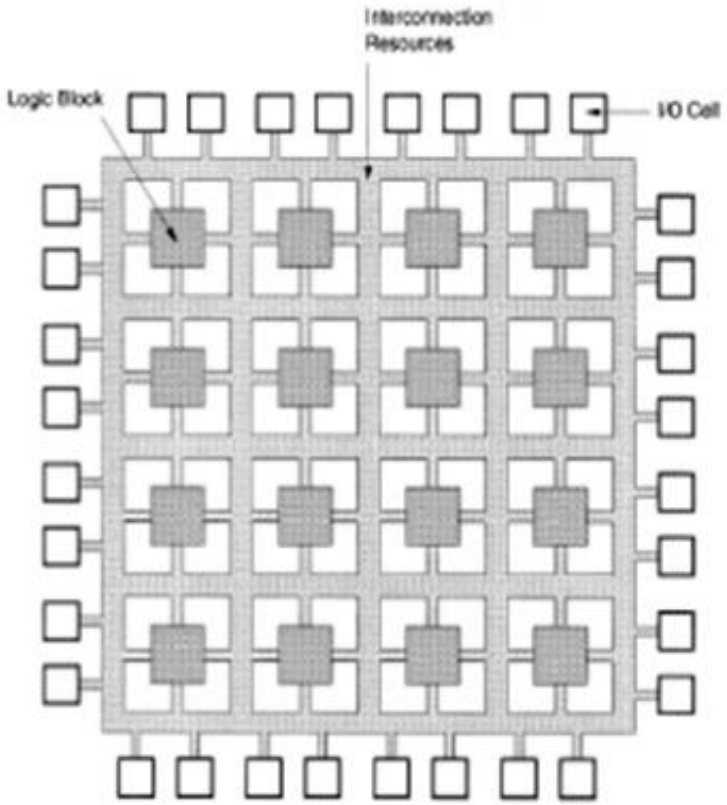

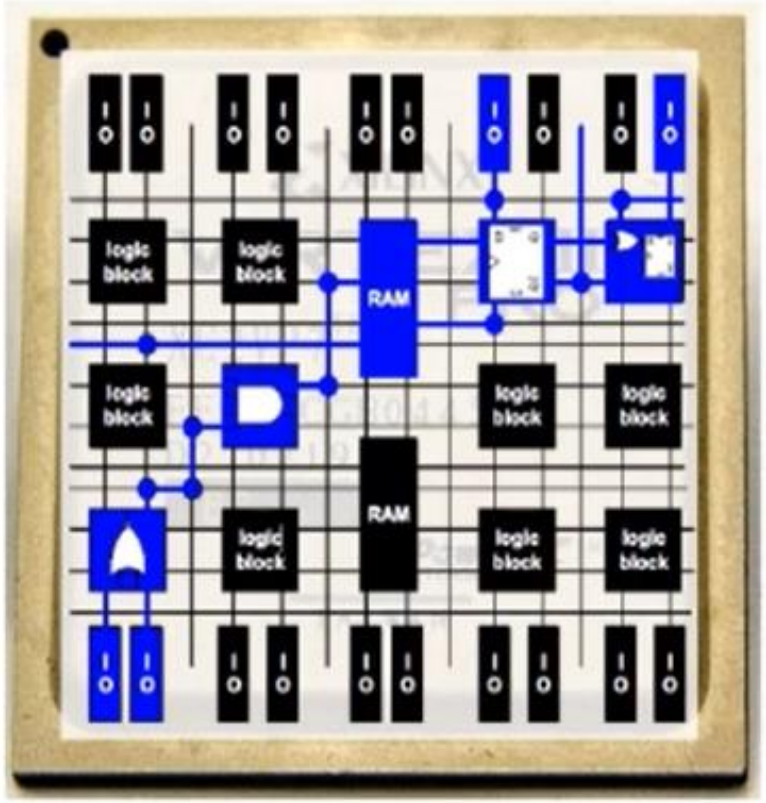

Why FPGA?

- FPGAs provide you with the possibility of becoming independent of component manufacturers and suppliers, since interfaces and system components can be tailored exactly to your requirements.
- In addition, the development cycle of complex systems is shortened by the early availability of product prototypes, and the developed hardware can be updated in the field, resulting in an extremely short time-to-market.
- The use of FPGAs makes you independent of component manufacturers, because the *functionality is not in the module itself but in the configuration*. This can be programmed in such a way that it can be undertaken without any adjustments on different FPGAs
- FPGAs are ideal for application in time-critical systems. In contrast to software-based solutions with real-time operating systems, an actual deterministic behavior can be achieved using FPGAs. Due to the offered flexibility, even complicated calculations can be carried out in an extremely short time.

FPGA vs ASIC

	FPGA	ASIC
Time to Market	Fast	Slow
NRE	Low	High
Design Flow	Simple	Complex
Unit Cost	High	Low
Performance	Medium	High
Power Consumption	High	Low
Unit Size	Medium	Low

FPGA Top Vendors

Vendor Software

- AMD Xilinx (ISE/Vivado)
- Intel (Quartus)
- Microchip (Libero)
- Lattice (Diamond)

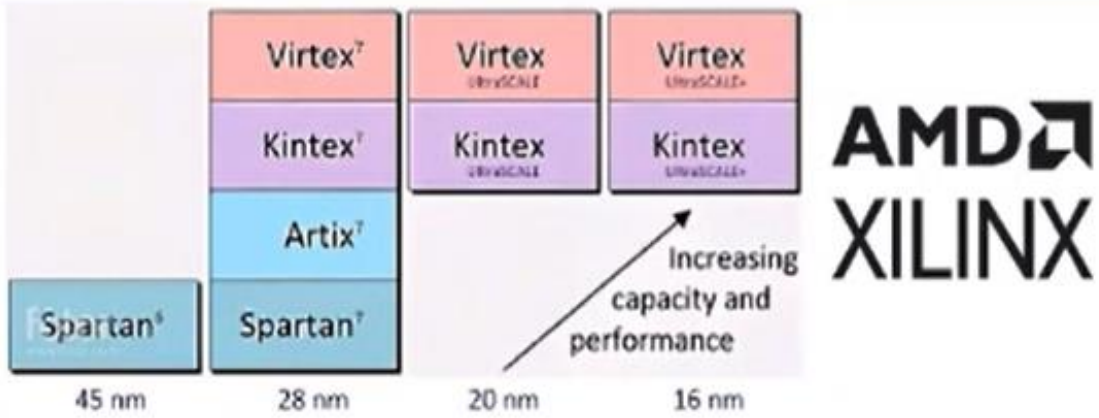

Intel MAX 10	Intel Cyclone 10	Intel Arria 10
– Board Management – Edge Compute – I/O Expansion – Sensor Interface	– Machine Vision – Embedded Vision – Robotics – Motor Control	– Datacenter – Networking – Military/Defense – Embedded Vision

4th Generation Low Density FPGAs

4th Generation Low Density SoC (FPGA + embedded 32-bit ARM® core)

5th Generation Mid-Range Density FPGAs

LUT: Look-up Table

A1	A0	M
0	0	0
0	1	0
1	0	0
1	1	1

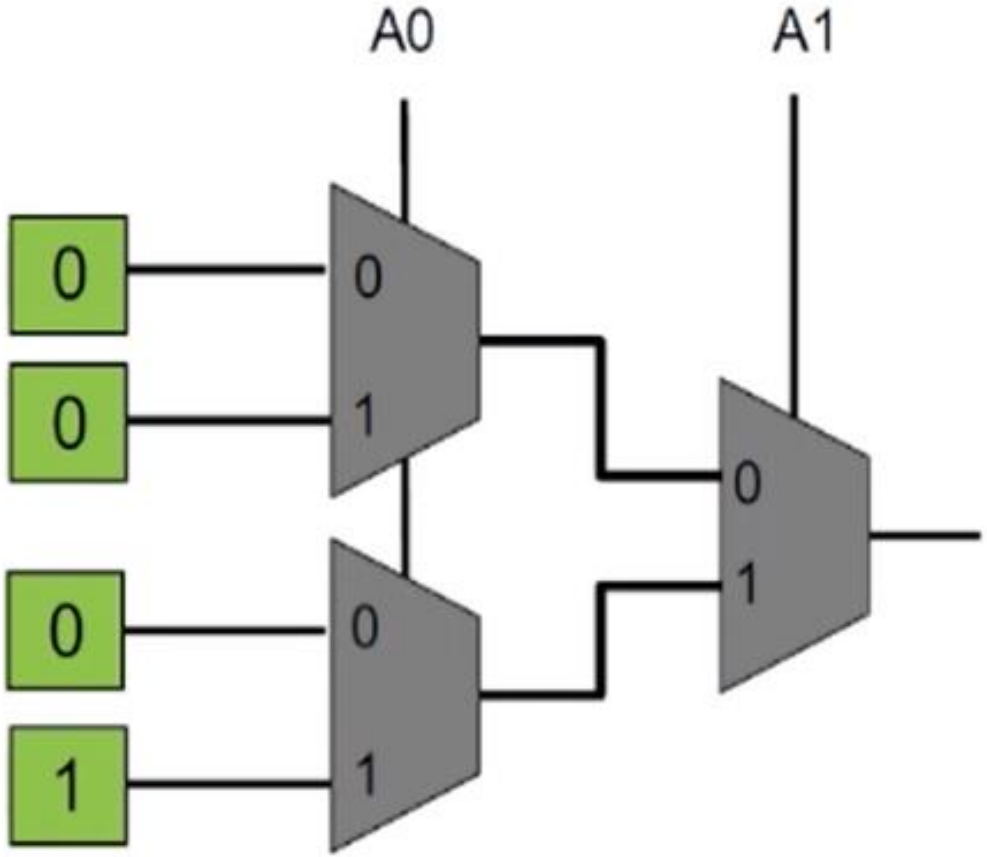

FPGA: Field Programmable Gate Array

- The user describes the desired functionality in a hardware description language (HDL) such as Verilog or VHDL, or possibly uses high-level synthesis to translate C or OpenCL to HDL.
- The HDL design is then compiled using a complex computer-aided design (CAD) flow into the bitstream file used to program all the FPGA's configuration SRAM cells.

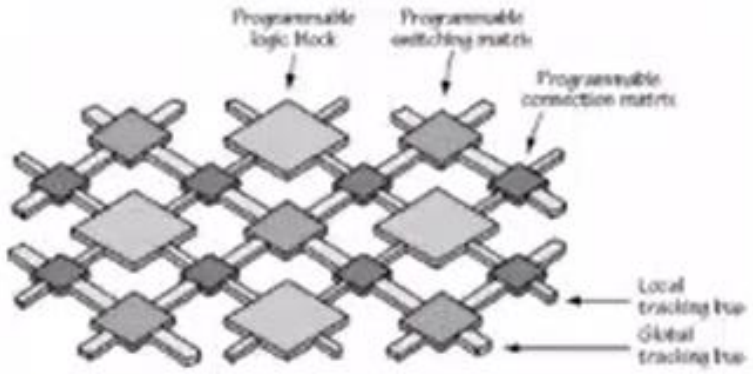

FPGA Architecture

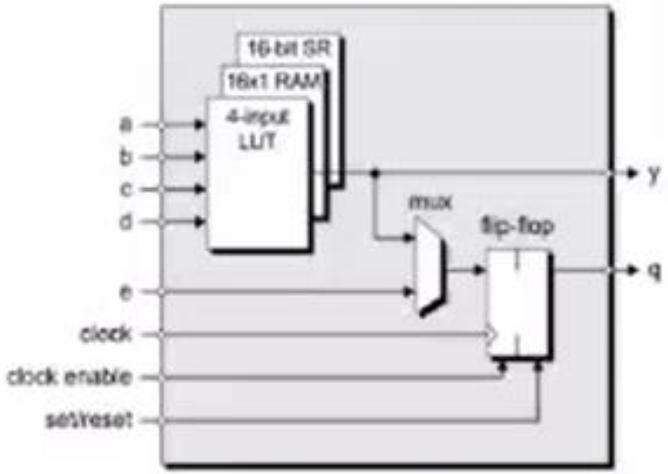

Logic Block

Programmable Logic Block

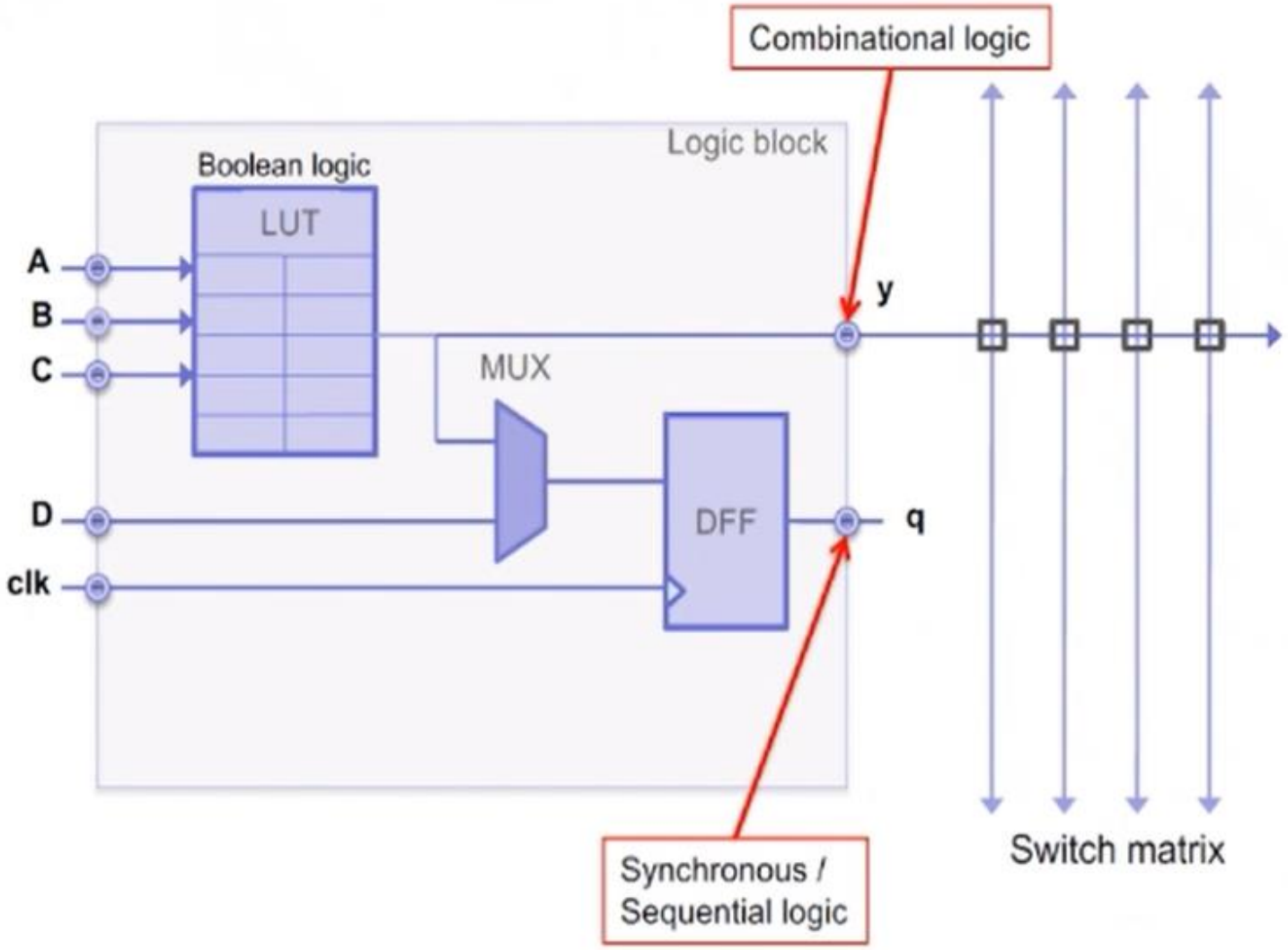

FPGA architecture Evolution

- Early FPGA architecture with programmable logic and IOs vs. modern heterogeneous FPGA architecture with RAMs, DSPs, and other hard blocks. All blocks are interconnected using bit-level programmable routing.

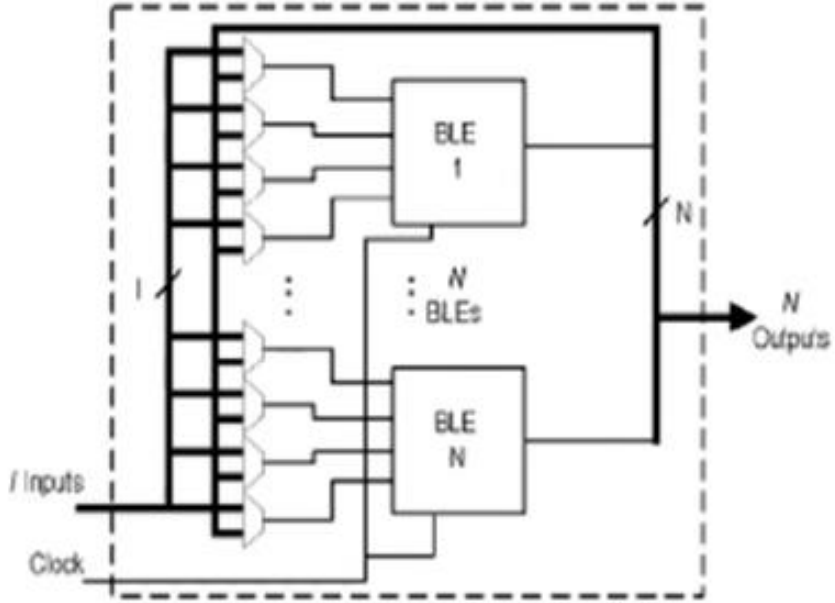

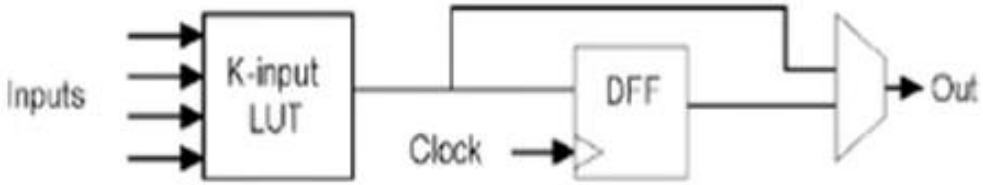

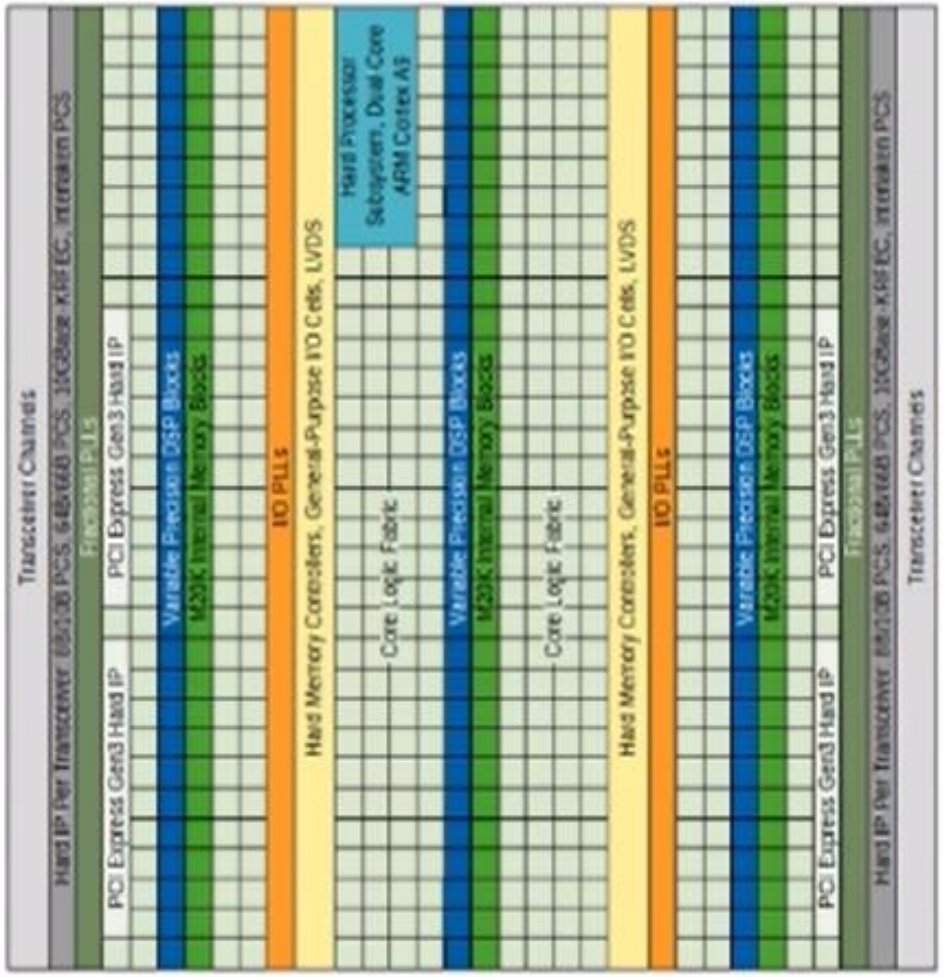

Fracturable LUTs

- k-input LUT can implement any function of k inputs where 2^k SRAM bits and 2^k:1 multiplexer
- k-input LUT can be built from 2 (k-1) LUTs followed by a 2:1 multiplexer
- Traditional 4LUTs provide the best area-delay product
- Larger LUTs
  - Shorter critical path
  - Absorb more logic

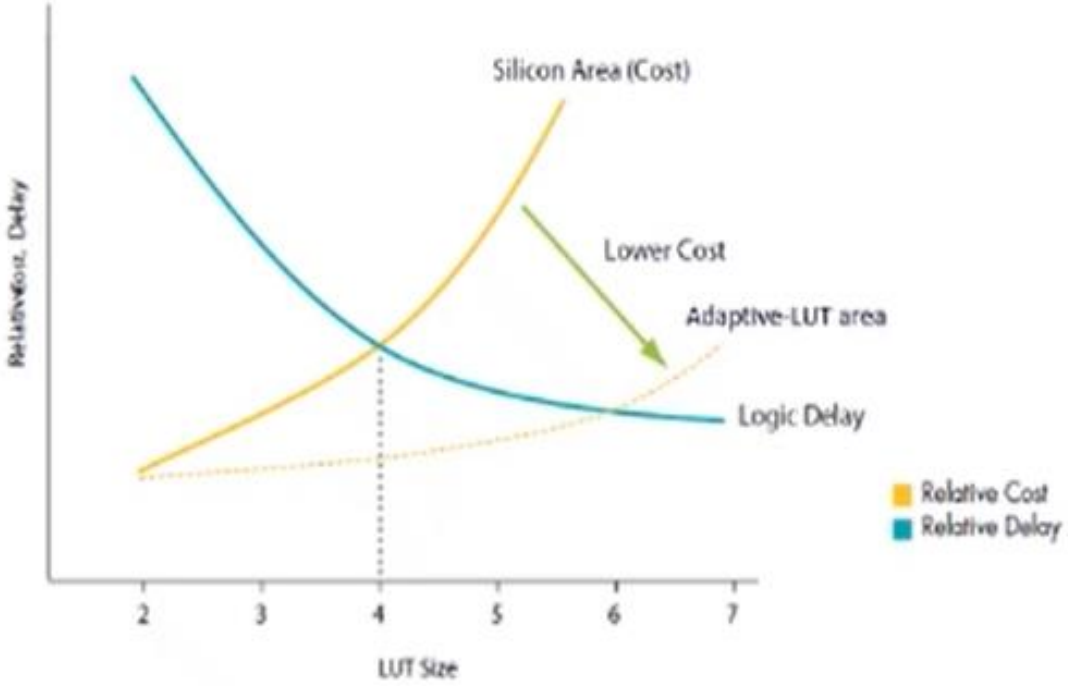

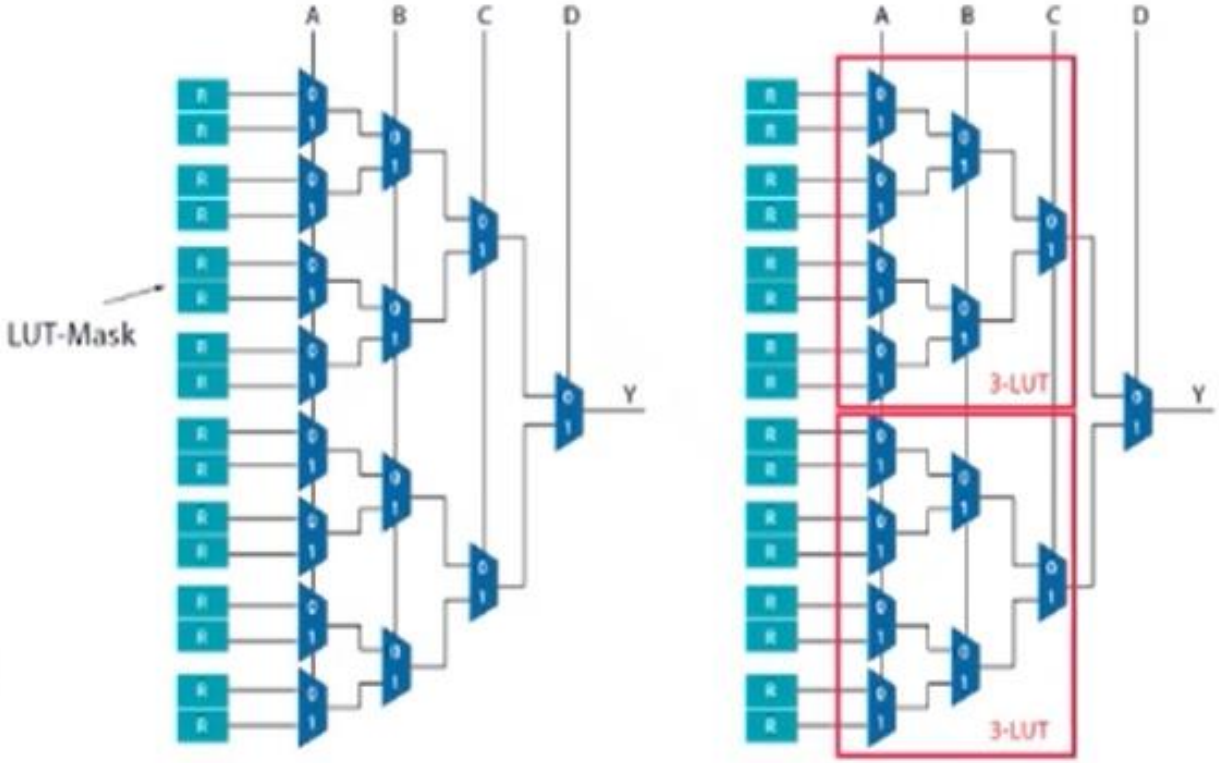

Fracturable LUTs

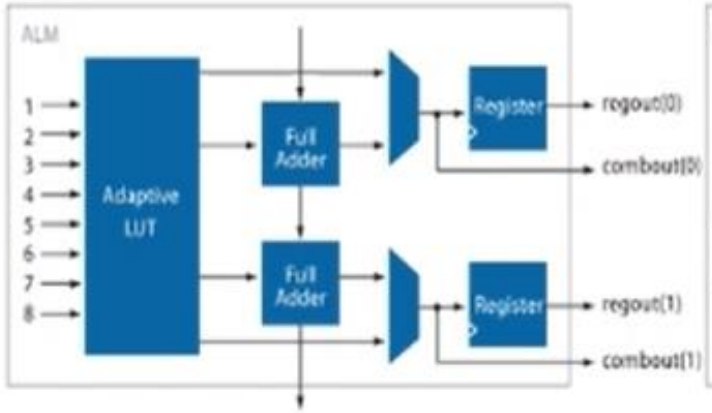

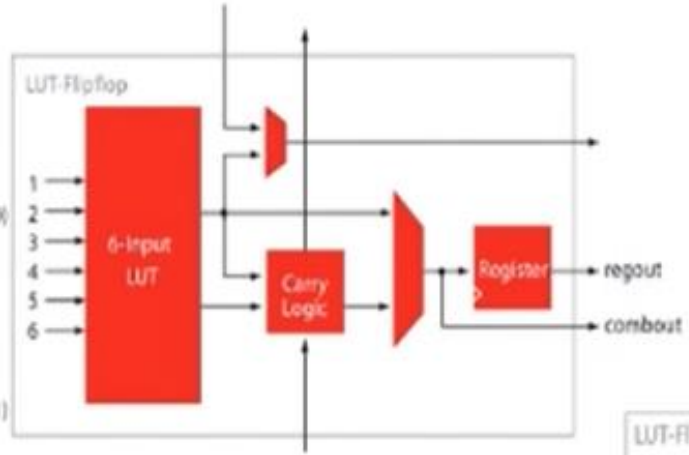

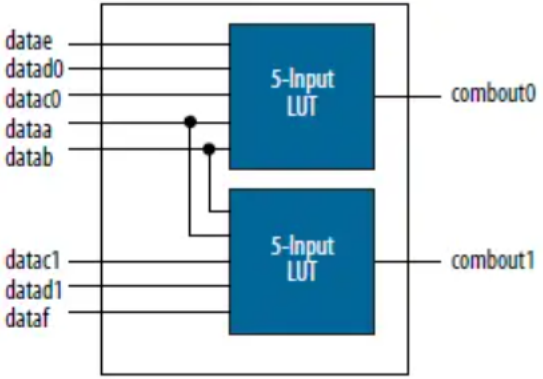

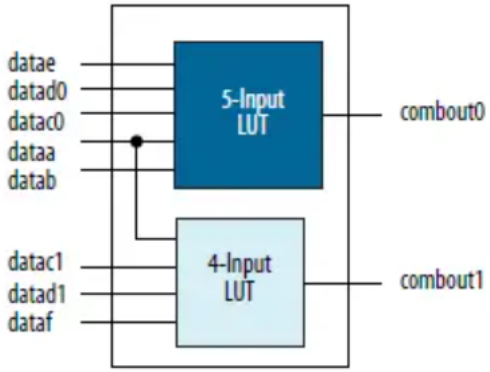

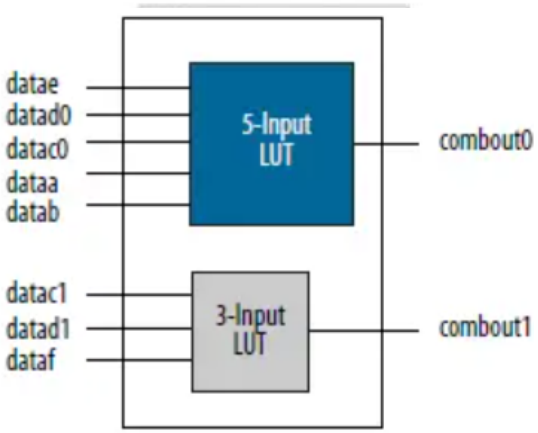

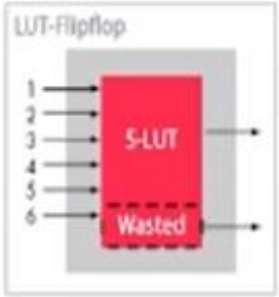

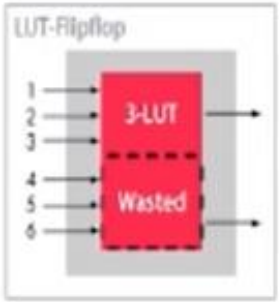

When 3 shared inputs cannot be found, two 6-LUTs must be used

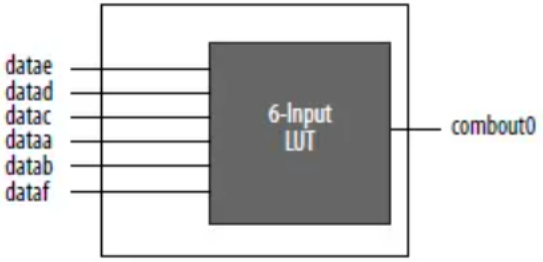

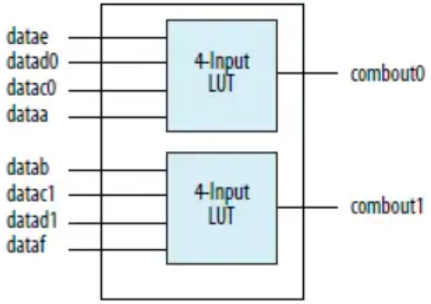

DSP Blocks: Digital Signal Processing Blocks

- Only carry chains were used to implement efficient adders as dedicated arithmetic circuits in commercial FPGA architectures.
- As a result, carry chains and LUTs had to be used to implement multipliers in the soft logic, resulting in a sizable area and delay penalty.

DSP Implementations	Block Architecture
Fixed-Point Arithmetic	• Input register bank • Pipeline register • Pre-adder/subtract • Internal coefficient • Multipliers • Adder and Subtractor • Accumulator, chainout adder, and Preload Constant • Systolic registers • Double accumulation register • Output register bank
Floating-Point Arithmetic	• Input register bank • Pipeline register • Multipliers • Adder • Accumulator • Output register bank • Exception Handling

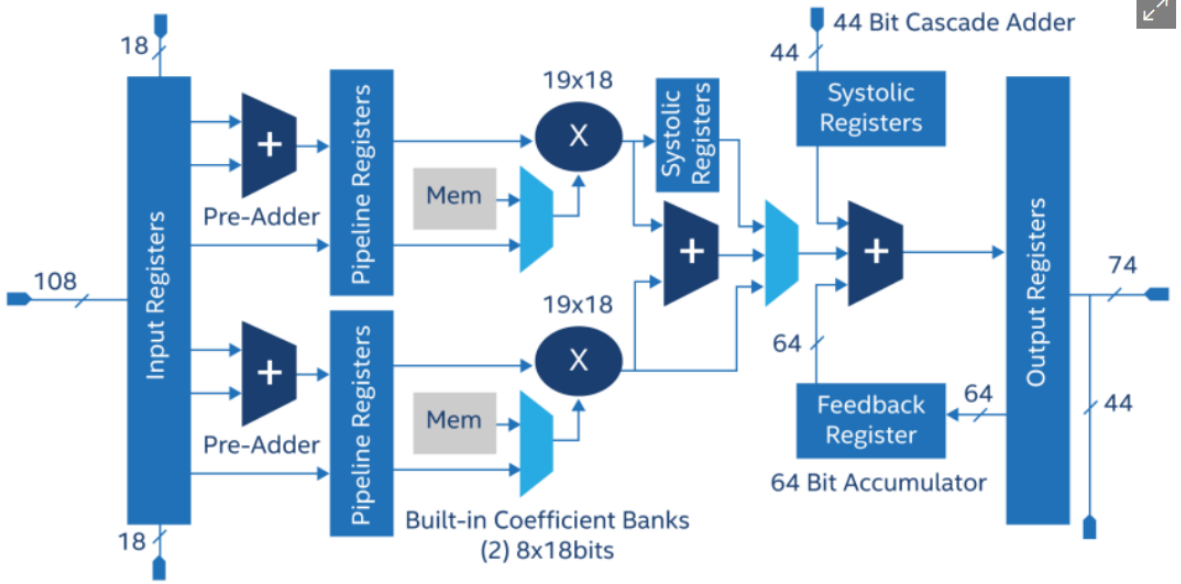

Standard Precision Mode

RAM Blocks

- Flipflops integrated in FPGA logic blocks were the first form of on-chip memory elements in FPGA architectures.
- However, as the capacity of FPGA logic increased, they were used to implement larger systems that almost always required memory to buffer.

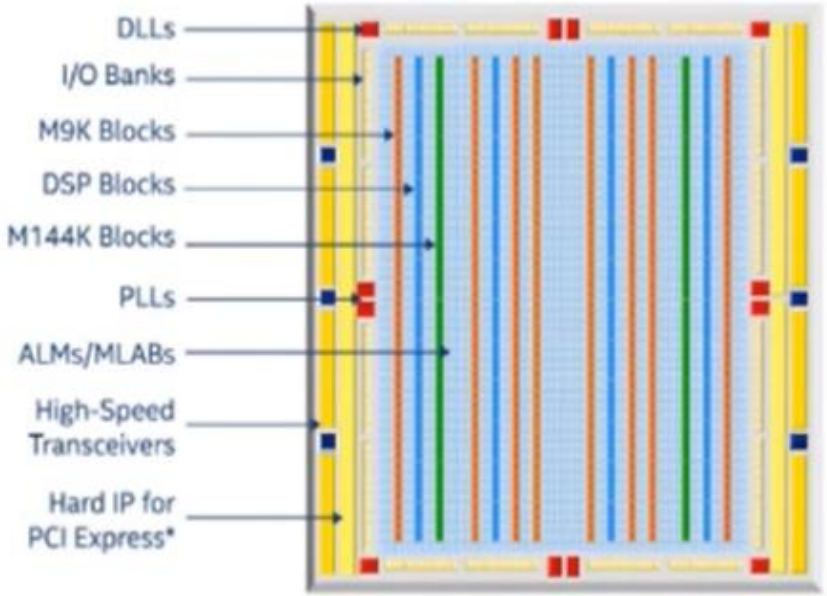

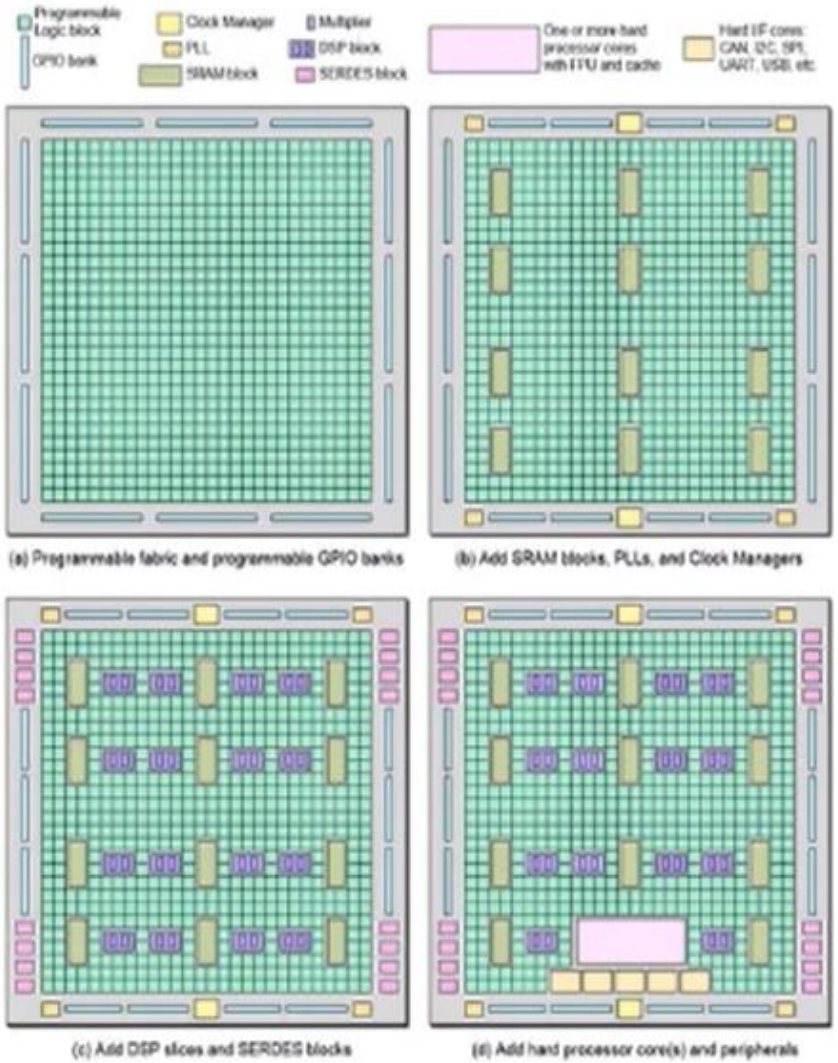

Inferring RAM blocks

Example 1: Single-Port RAM – RAM1K18_RT (Write-First Mode)

The following design is a single-port RAM with synchronous read and write operation. The same address is used for read and write operations in the write-first mode.

```
module ram_singleport_addreg (clk,wr,addr,din,dout);
input clk;
input [17:0] din;
input wr;
input [9:0] addr;
output [17:0] dout;

reg [9:0] addr_reg;
reg [17:0] mem [0:1023] ;
assign dout = mem[addr_reg]; always@(posedge clk)
begin
   addr_reg <= addr;
      if(wr)
         mem[addr]<= din;
end
endmodule
```

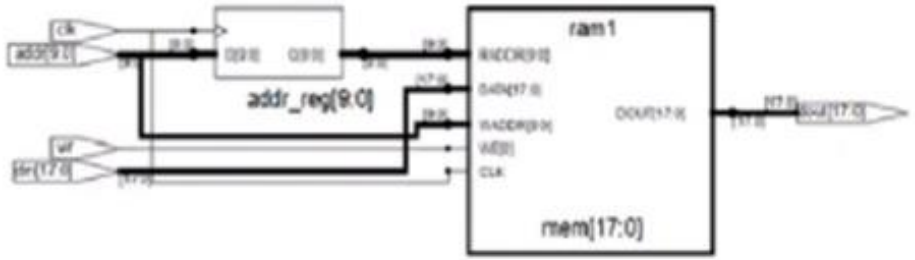

Inferring arithmetic blocks

Example 3: 18x18-Bit Signed Multiplier with Registered I/Os

This is code for an 18x18 signed multiplier. The inputs and outputs are registered, with a synchronous active low reset signal. The synthesis tool fits all this logic into one MACC block, as shown below.

```
module sign18x18_mult ( in1, in2, clk, rst, out1 );

input signed [17:0] in1, in2;
input clk;
input rst;
output signed [40:0] out1;
reg signed [40:0] out1;
reg signed [17:0] in1_reg, in2_reg;

always @ ( posedge clk )
begin
   if ( ~rst )
      begin
         in1_reg <= 18'b0;
         in2_reg <= 18'b0;
         out1 <= 41'b0;
      end
      else
      begin
         in1_reg <= in1;
         in2_reg <= in2;
         out1 <= in1_reg * in2_reg;
      end
end

endmodule
```

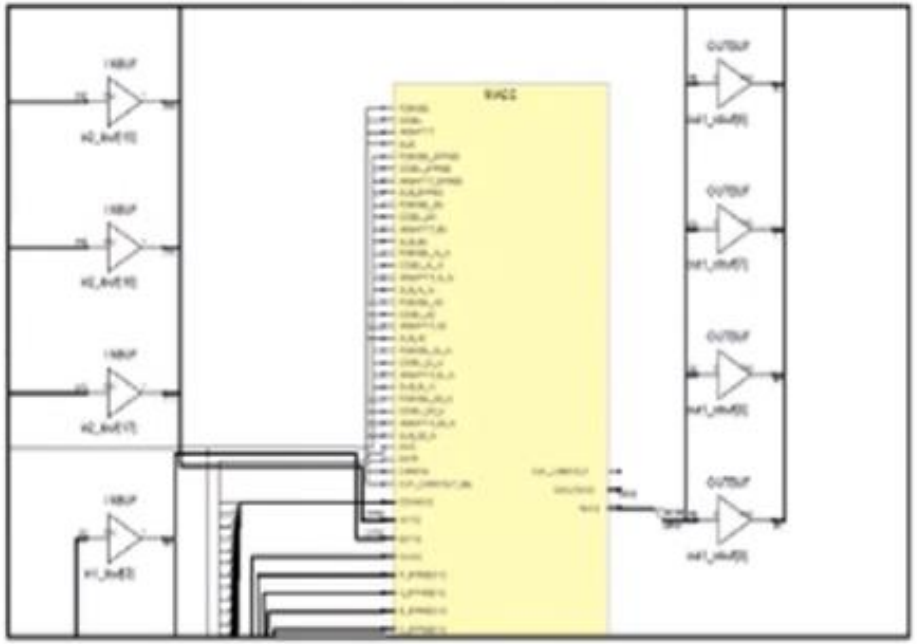

FPGA Vendor library guide

UltraScale Architecture Libraries Guide

UG974 (v2017.4) December 20, 2017

XILINX

DOA_REG, DOB_REG: A value of 1 enables the output registers to the RAM enabling higher performance clock-to-out from the RAM at the expense of an added clock cycle of read latency. A value of 0 allows a read in one clock cycle but will result in slower clock-to-out timing.				
DOA_REG	DECIMAL	1, 0	1	A value of 1 enables the output registers to the RAM enabling higher performance clock-to-out from the RAM at the expense of an added clock cycle of read latency. A value of 0 allows a read in one clock cycle but will result in slower clock-to-out timing.
DOB_REG	DECIMAL	1, 0	1	A value of 1 enables the output registers to the RAM enabling higher performance clock-to-out from the RAM at the expense of an added clock cycle of read latency. A value of 0 allows a read in one clock cycle but will result in slower clock-to-out timing.
ENADDRENA/ENADDRENB: Specifies if Address Enable pin is enabled				
ENADDRENA	STRING	"FALSE", "TRUE"	"FALSE"	Specifies if Address Enable pin is enabled
ENADDRENB	STRING	"FALSE", "TRUE"	"FALSE"	Specifies if Address Enable pin is enabled

Port	Direction	Width	Function
Port A Address/Control Signals: Port A address and control (clock, reset, enables, etc.) signals.			
ADDRARDADDR<13:0>	Input	14	Port A address input bus/Read address input bus.
ADDRENA	Input	1	Active-High port A address input bus/Read address input bus.
CLKARDCLK	Input	1	Port A clock input/Read clock input.
ENARDEN	Input	1	Port A RAM enable/Read enable. For best power characteristics of this component, it is suggested to drive this pin low when ever a new read or write operation is not necessary on Port A. Significant power savings can be seen when this port is driven low.
REGCEAREGCE	Input	1	Port A output register clock enable input/Output register clock enable input (valid only when DOA_REG=1).
RSTRAMARSTRAM	Input	1	Synchronous data latch set/reset to value indicated by SRVAL_A. RSTRAMARSTRAM sets/resets the BRAM data output latch when DO_REG=0 or 1. If DO_REG=1 there is a cycle of latency between the internal data latch node that is reset by RSTRAMARSTRAM and the DO output of the BRAM. This signal resets port A RAM output when READ_WIDTH>=18 and the entire RAM output when READ_WIDTH=36.

RAMB18E2

Primitive: 18K-bit Configurable Synchronous Block RAM

PRIMITIVE_GROUP BLOCKRAM
PRIMITIVE_SUBGROUP BRAM
Families: UltraScale, UltraScale+

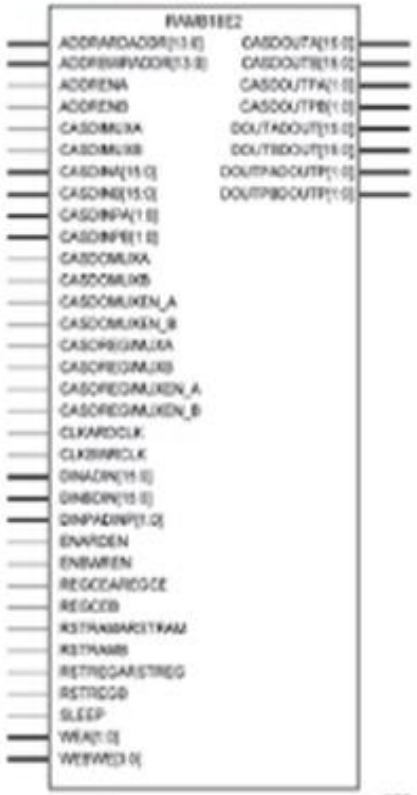

FPGA Vendor library guide

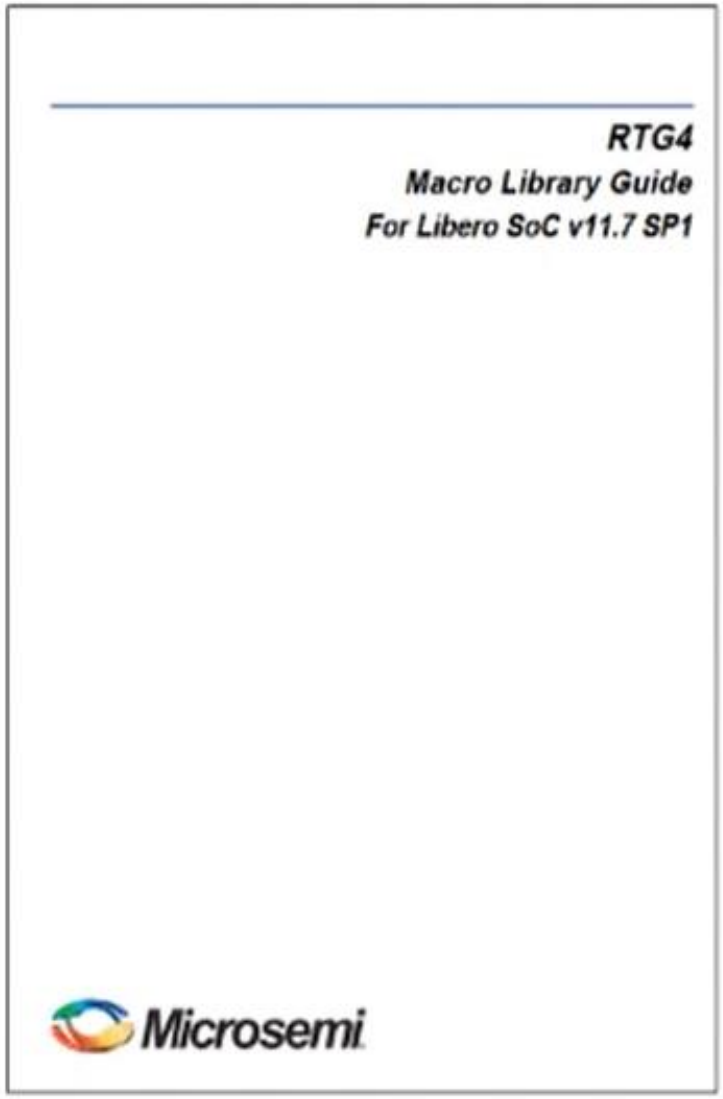

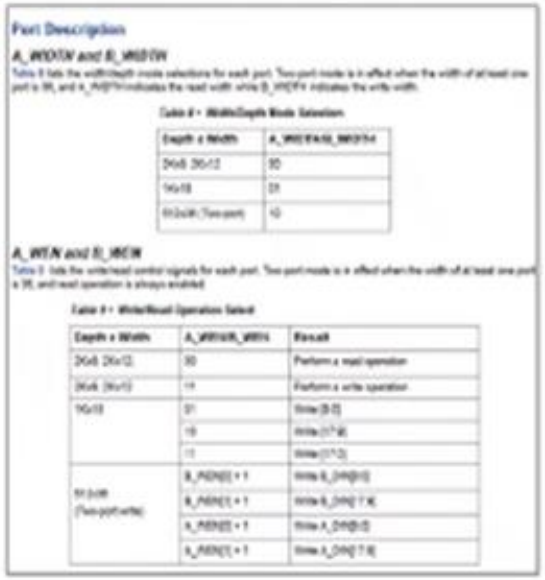

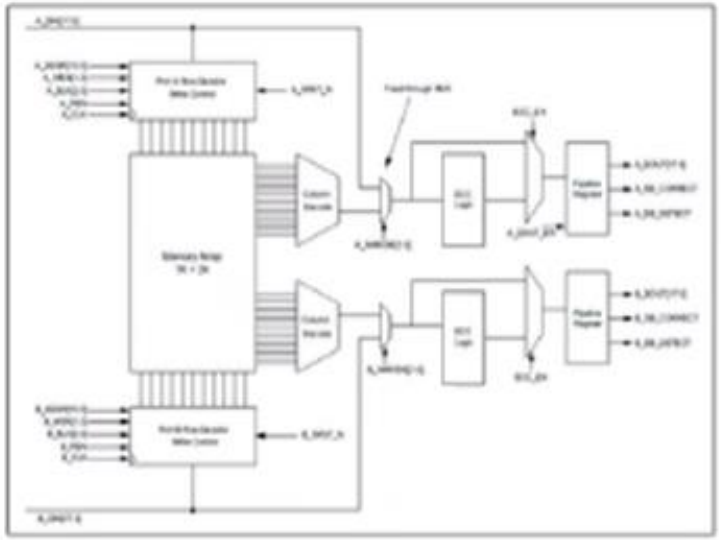

Table 7 • Port List for RAM1K18_RT

Pin Name	Pin Direction	Type	Description	Polarity
A_ADDR[10:0]	Input	Dynamic	Port A address	
A_BLK[2:0]	Input	Dynamic	Port A block selects	High
A_CLK	Input	Dynamic	Port A clock	Rising
A_DIN[17:0]	Input	Dynamic	Port A write-data	
A_DOUT[17:0]	Output	Dynamic	Port A read-data	
A_WEN[1:0]	Input	Dynamic	Port A write-enables (per byte)	High
A_REN	Input	Dynamic	Port A read-enable	High
A_WIDTH[1:0]	Input	Static	Port A width/depth mode select	
A_WMODE[1:0]	Input	Static	Port A Read-before-write and Feed-through write selects	High
A_DOUT_BYPASS	Input	Static	Port A pipeline register select	Low

Global Routing Components

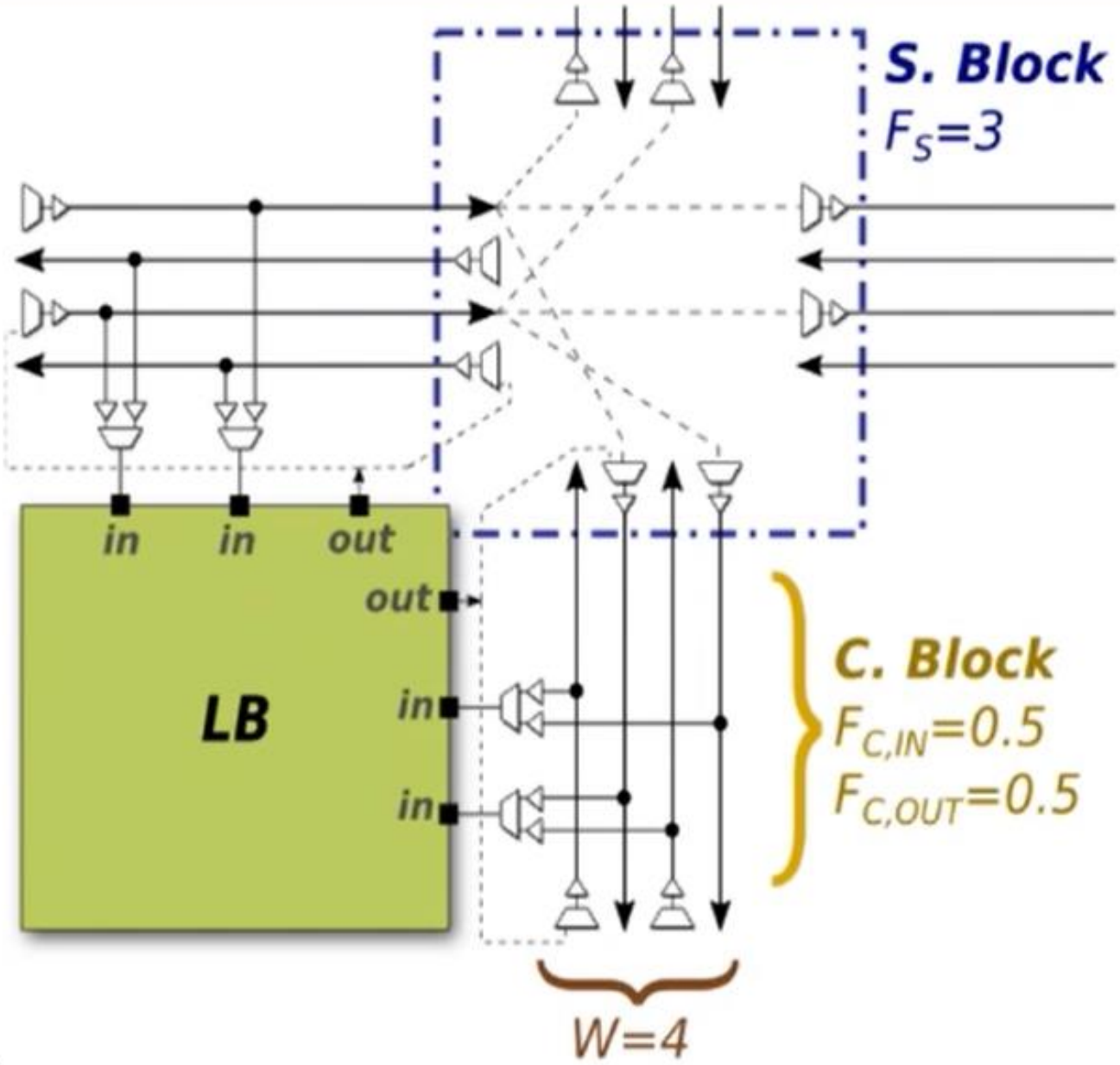

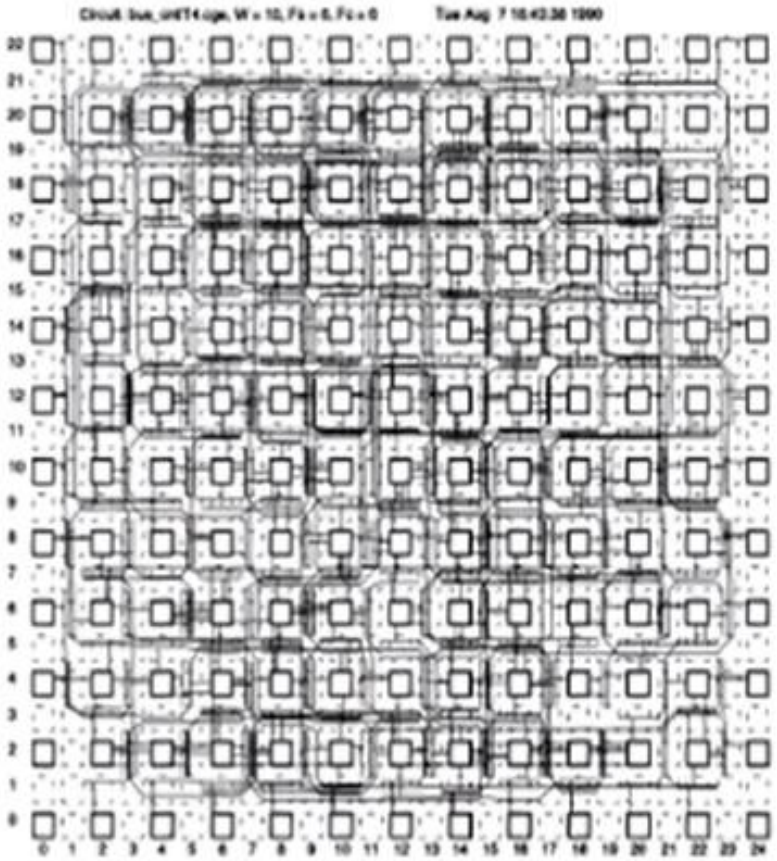

FPGA Architecture Research

- Process Technology Changes
- New standards, faster processing: 4G => 5G
- Deep Learning => new compute demands
- Embedded FPGAs
- Innovative Architecture Ideas!

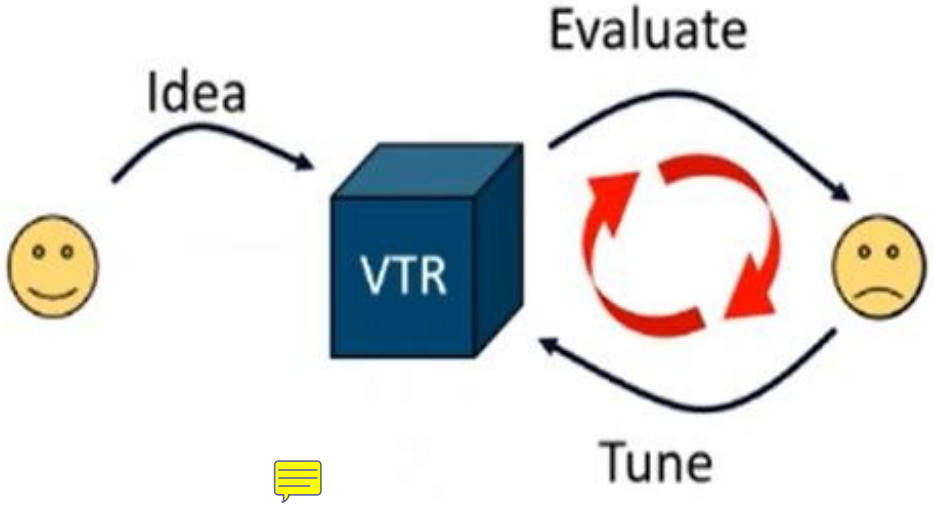

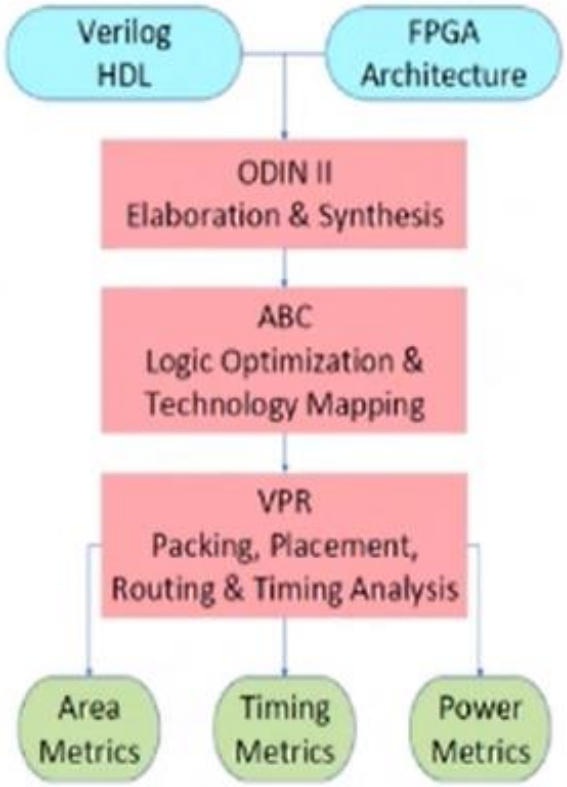

VTR open-source tool flow

Vivado Flow & Logic Simulation

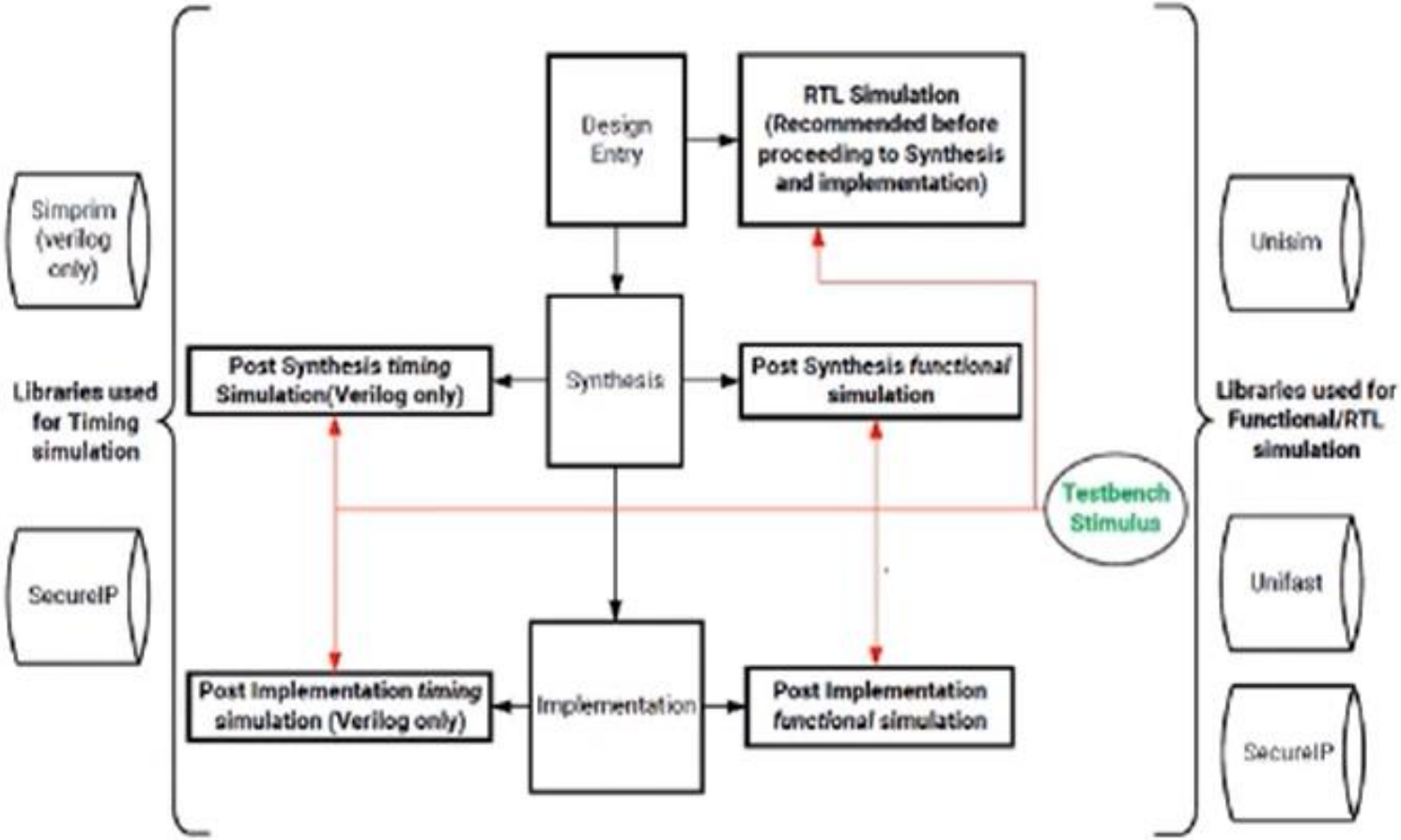

Vivado Demo

Vivado Design Suite User Guide
Getting Started
UG910 (v2021.2) October 27, 2021

VIVADO
XILINX
Quick Start
Tasks
Learning Center